APPENDIX H

DRAWINGS

REFERENCE DRAWINGS		REVISIONS			
DRG. No.	TITLE	REV No.	DATE	DESCRIPTION	APPR.
		A	28/01/11	FOR INFORMATION	PLR

DESIGNED:	D VAN COLLER	PROJECT ENGINEER:	P LE ROUX
DRAWN:	D VAN COLLER	TCTA:	
CHECKED:	J MULDER		
CHIEF DESIGNER:		SCALE:	1:1000

SCALE 1 : 1000 0 5 10 15 20 25 50

MOKOLO CROCODILE Consultants

TCTA A new word for water

MOKOLO CROCODILE WATER AUGMENTATION PROJECT (MCWAP)

VLIEEPOORT ABSTRACTION WORKS

GENERAL LAYOUT

A3	DWAF DRG. No.	DRAWING NUMBER	2B – C3 – 001	REV No. A

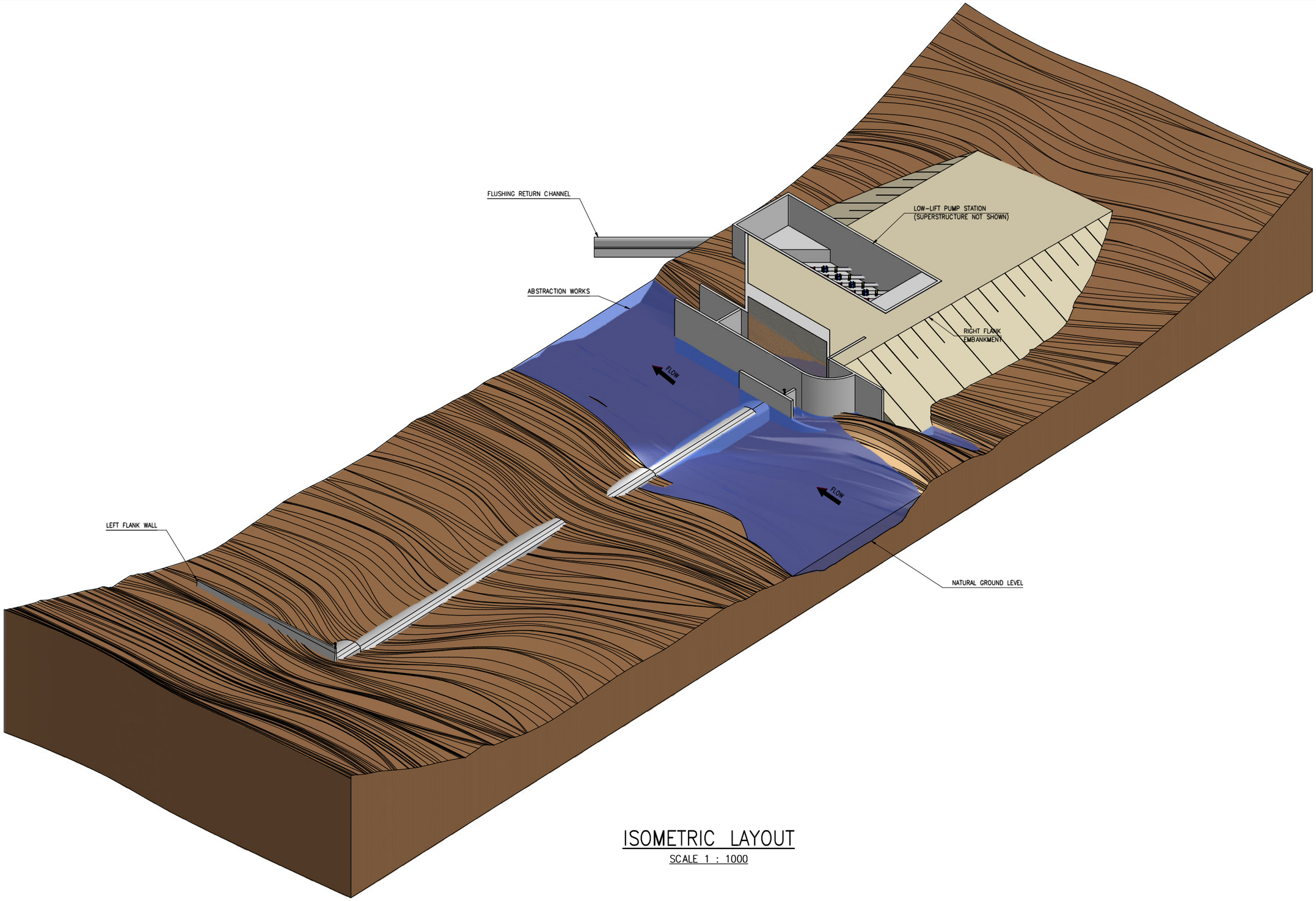

ISOMETRIC LAYOUT

SCALE 1 : 1000

REFERENCE DRAWINGS		REVISIONS			
DRG. No.	TITLE	REV No.	DATE	DESCRIPTION	APPR.
		A	28/01/11	FOR INFORMATION	PLR

DESIGNED:	D VAN COLLER	PROJECT ENGINEER:	P LE ROUX
DRAWN:	D VAN COLLER	TCTA:	
CHECKED:	J MULDER		
CHIEF DESIGNER:		SCALE:	1:1 000

SCALE 1 : 1 000 0 5 10 15 20 25 50

MOKOLO CROCODILE Consultants

TCTA A new word for water

MOKOLO CROCODILE WATER AUGMENTATION PROJECT (MCWAP)

VLIEEPOORT ABSTRACTION WORKS

GENERAL LAYOUT

ISOMETRIC VIEW

A3 | DWAF DRG. No. | DRAWING NUMBER 2B-C5-001 | REV No. A

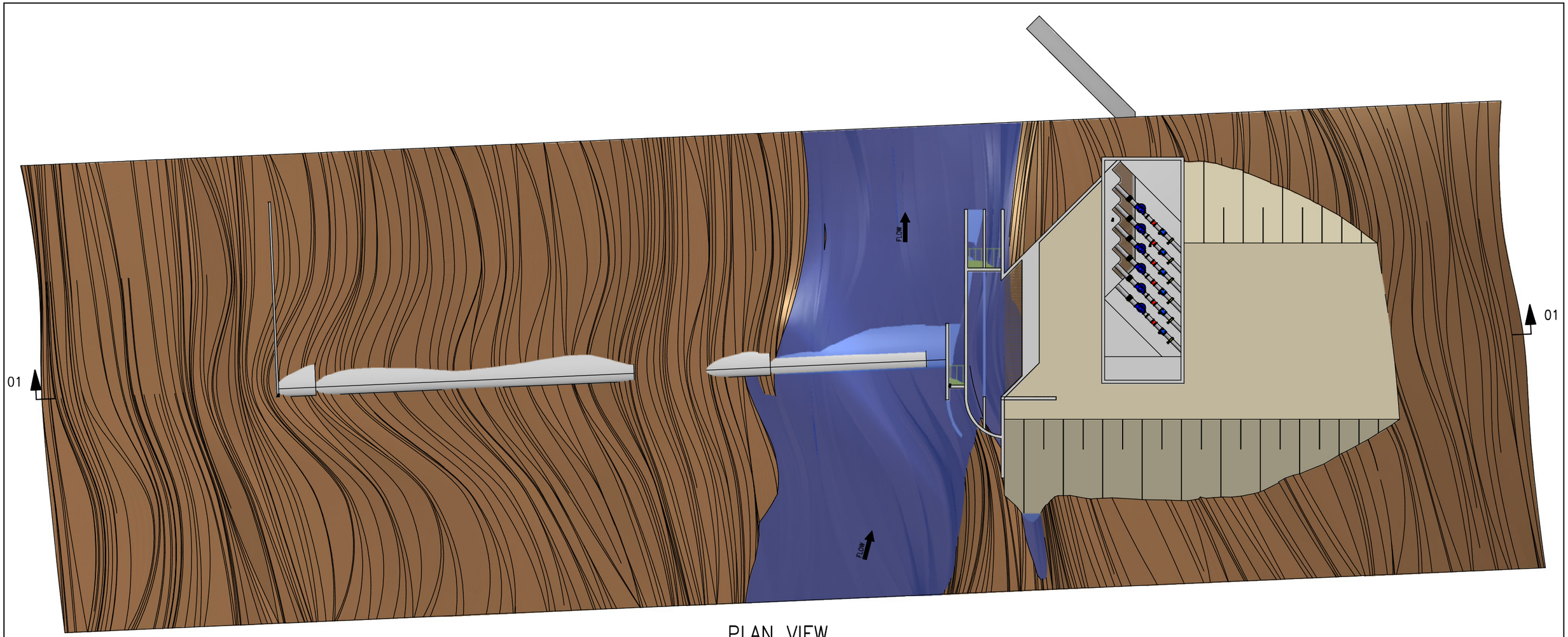

PLAN VIEW

SCALE 1 : 1000

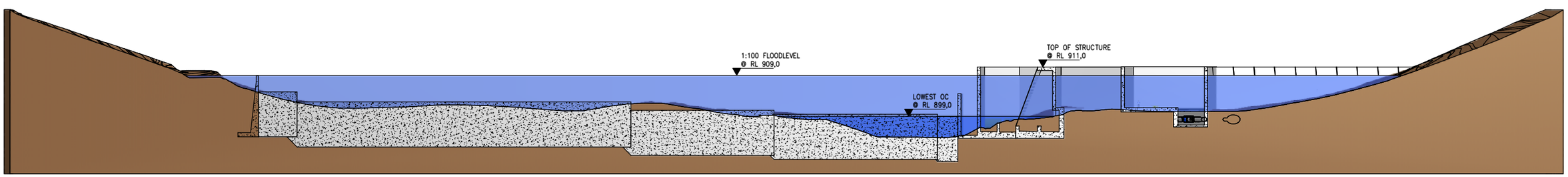

SECTION 01–01

SCALE 1 : 1000

REFERENCE DRAWINGS		REVISIONS			
DRG. No.	TITLE	REV No.	DATE	DESCRIPTION	APPR.

DESIGNED:	D VAN COLLER	PROJECT ENGINEER:	P LE ROUX
DRAWN:	D VAN COLLER	TCTA:	
CHECKED:	J MULDER		
CHIEF DESIGNER:		SCALE:	1:1000

SCALE 1 : 1 000 0 5 10 15 20 25 50

MOKOLO CROCODILE Consultants

TCTA A new word for water

MOKOLO CROCODILE WATER AUGMENTATION PROJECT (MCWAP)

VLIEEPOORT ABSTRACTION WORKS

GENERAL LAYOUT

PLAN AND SECTION

A3	DWAF DRG. No.	DRAWING NUMBER 2B–C5–002	REV No. A

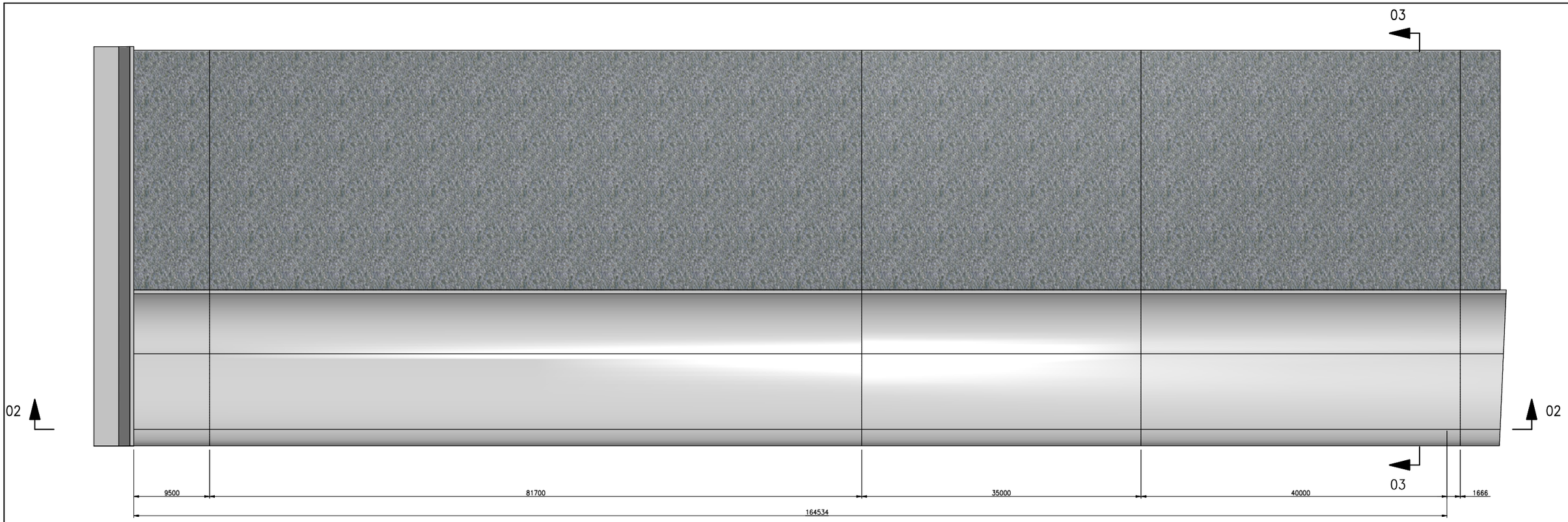

WEIR LAYOUT PLAN

SCALE 1 : 500

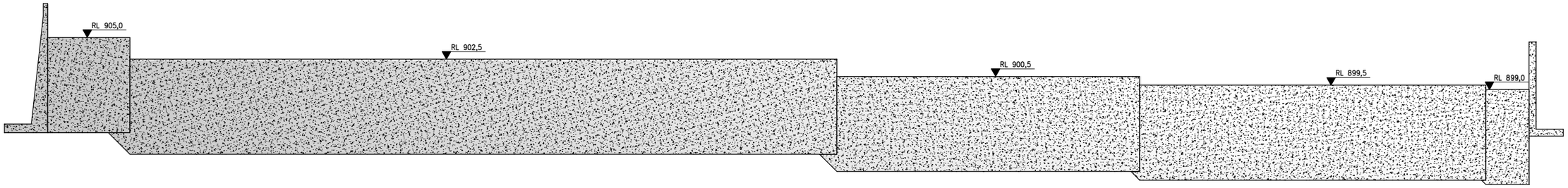

WEIR LONG SECTION 02–02

SCALE 1 : 500

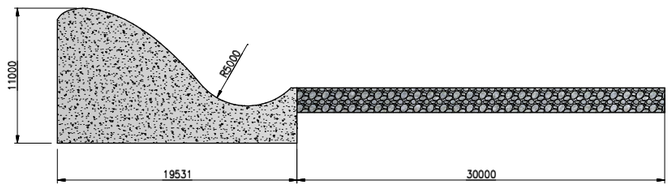

WEIR CROSS SECTION 03–03

SCALE 1 : 500

REFERENCE DRAWINGS		REVISIONS			
DRG. No.	TITLE	REV No.	DATE	DESCRIPTION	APPR.
		A	28/01/11	FOR INFORMATION	PLR

DESIGNED:	D VAN COLLER	PROJECT ENGINEER:	P LE ROUX
DRAWN:	D VAN COLLER	TCTA:	
CHECKED:	J MULDER		
CHIEF DESIGNER:		SCALE:	1:500

SCALE 1 : 500 0 2,5 5 7,5 10 12,5 25

MOKOLO CROCODILE Consultants

TCTA A new word for water

MOKOLO CROCODILE WATER AUGMENTATION PROJECT (MCWAP)

VLIEEPOORT ABSTRACTION WORKS

ABSTRACTION WEIR

LAYOUT AND SECTIONS

A3 | DWAF DRG. No. | DRAWING NUMBER 2B–C5–003 | REV No. A

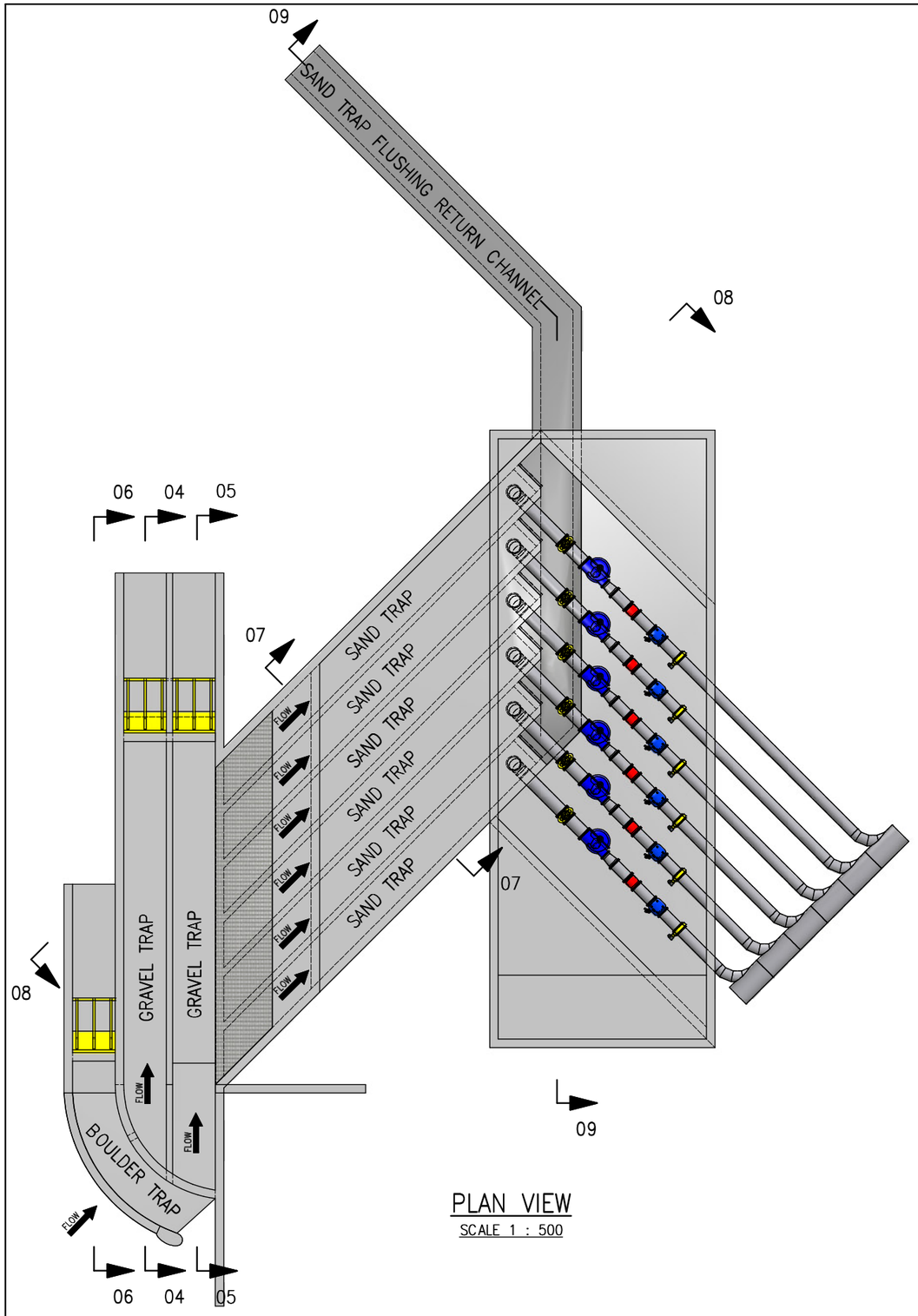

PLAN VIEW

SCALE 1 : 500

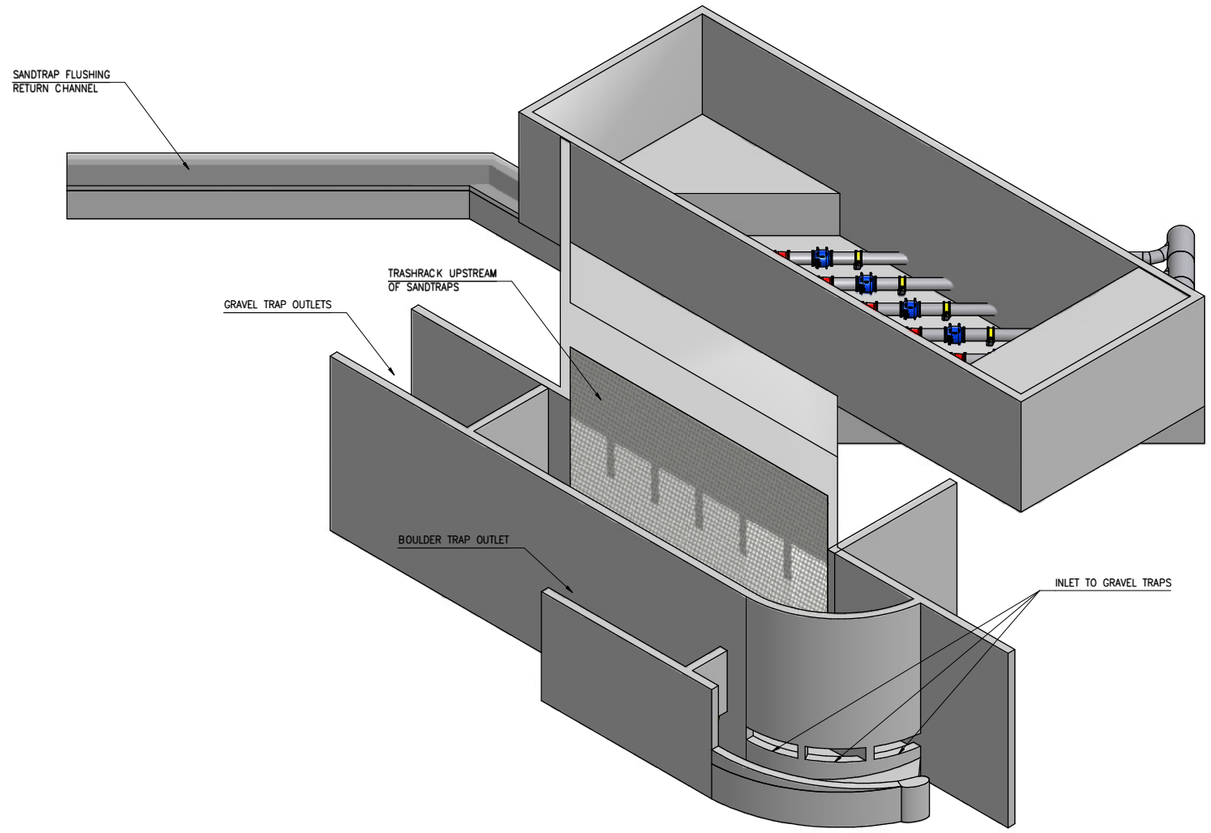

ISOMETRIC VIEW

SCALE 1 : 500

REFERENCE DRAWINGS		REVISIONS			
DRG. No.	TITLE	REV No.	DATE	DESCRIPTION	APPR.
		A	28/01/11	FOR INFORMATION	PLR

DESIGNED:	D VAN COLLER	PROJECT ENGINEER:	P LE ROUX
DRAWN:	D VAN COLLER	TCTA:	
CHECKED:	J MULDER		
CHIEF DESIGNER:		SCALE:	1:500

SCALE 1 : 500 0 2,5 5 7,5 10 12,5 25

MOKOLO CROCODILE Consultants

TCTA A new word for water

MOKOLO CROCODILE WATER AUGMENTATION PROJECT (MCWAP)

VLIEEPOORT ABSTRACTION WORKS

ABSTRACTION WORKS

LAYOUT AND ISOMETRIC VIEW

A3 | DWAF DRG. No. | DRAWING NUMBER 2B-C5-004 | REV No. A

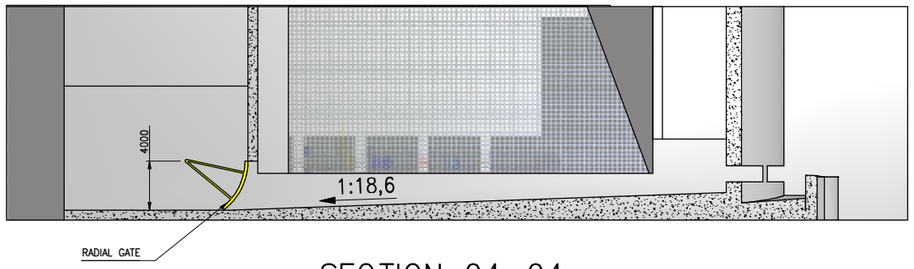

SECTION 04–04
THROUGH GRAVEL TRAP 1

SCALE 1 : 500

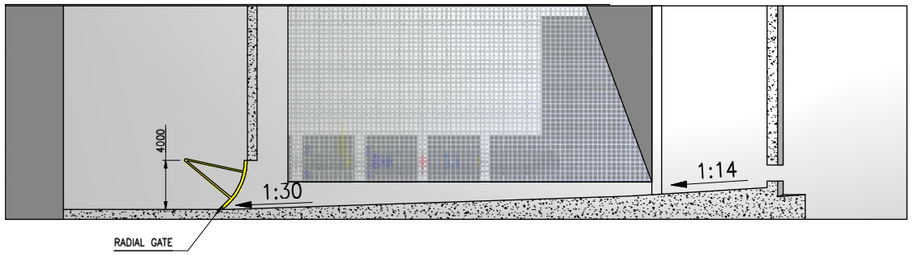

SECTION 05–05
THROUGH GRAVEL TRAP 2

SCALE 1 : 500

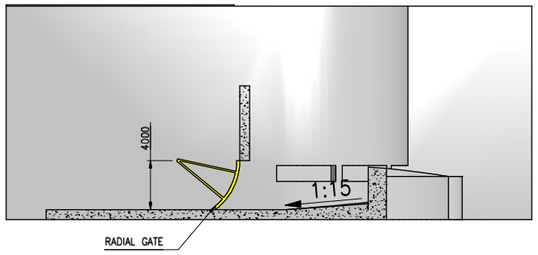

SECTION 06–06
THROUGH BOULDER TRAP

SCALE 1 : 500

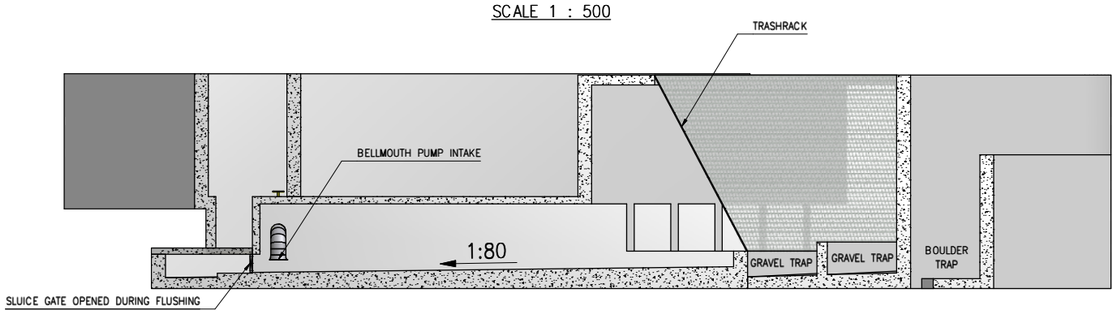

SECTION 08–08
THROUGH SAND TRAP CHANNEL

SCALE 1 : 500

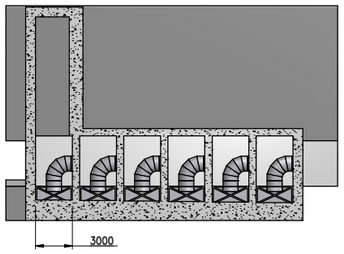

SECTION 07–07
ACROSS SAND TRAP CHANNELS

SCALE 1 : 500

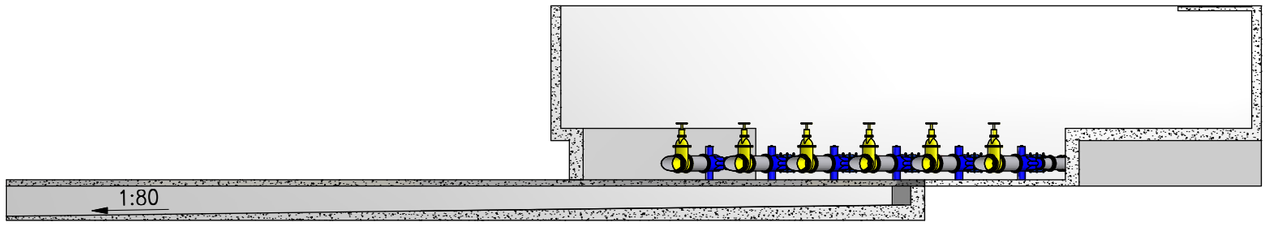

SECTION 09–09
THROUGH FLUSHING CHANNEL

SCALE 1 : 500

REFERENCE DRAWINGS		REVISIONS			
DRG. No.	TITLE	REV No.	DATE	DESCRIPTION	APPR.
		A	28/01/11	FOR INFORMATION	PLR

DESIGNED:	D VAN COLLER	PROJECT ENGINEER:	P LE ROUX
DRAWN:	D VAN COLLER	TCTA:	
CHECKED:	J MULDER		
CHIEF DESIGNER:		SCALE:	1:500

SCALE 1 : 500 0 2,5 5 7,5 10 12,5 25

MOKOLO CROCODILE Consultants

TCTA A new word for water

MOKOLO CROCODILE WATER AUGMENTATION PROJECT (MCWAP)

VLIEEPOORT ABSTRACTION WORKS

ABSTRACTION WORKS

SECTIONS

A3 | DWAF DRG. No. | DRAWING NUMBER 2B–C5–005 | REV No. A

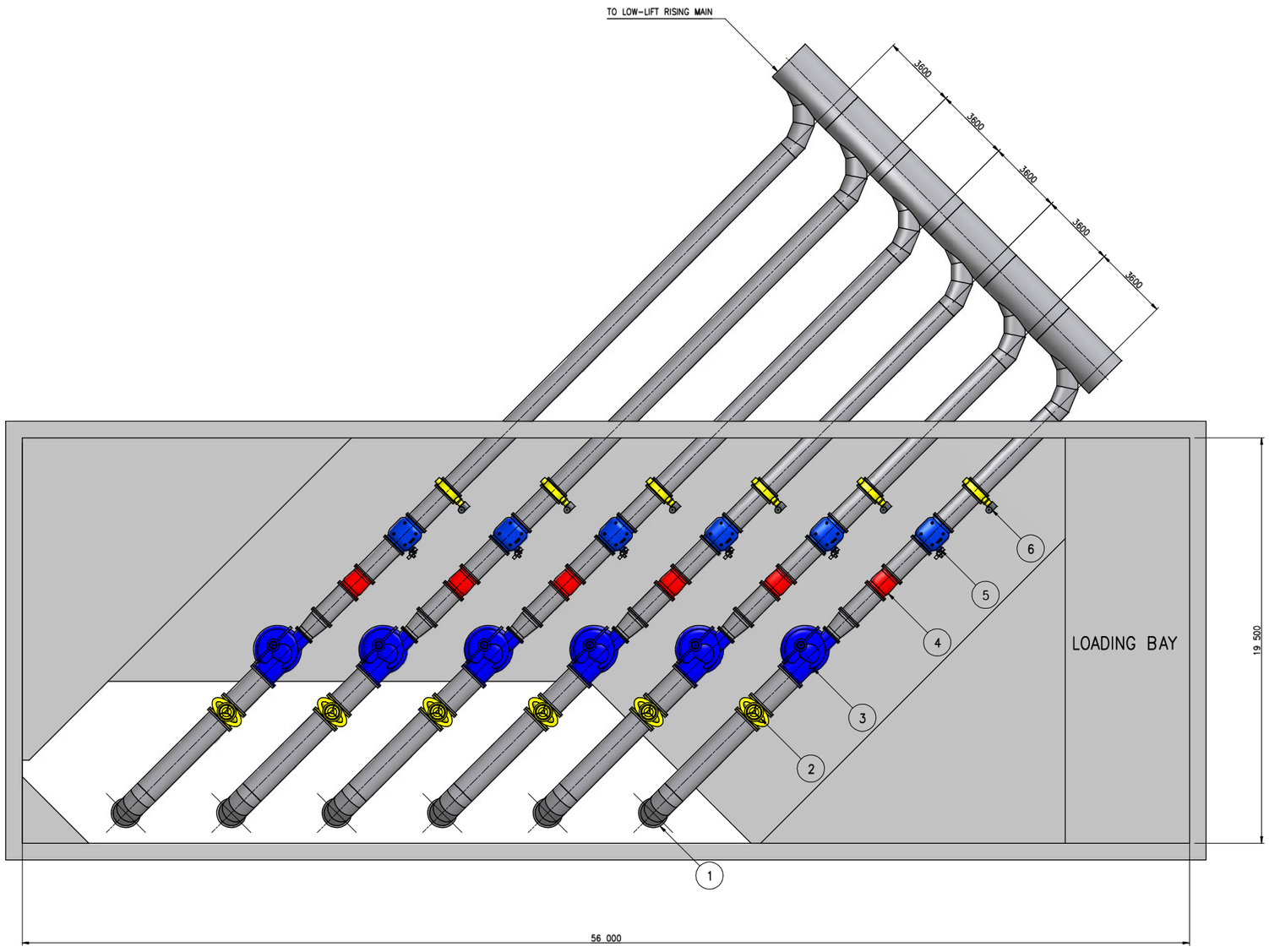

LOW-LIFT PUMP STATION LAYOUT

SCALE 1 : 250

PARTS LIST		
ITEM	QTY	DESCRIPTION
1	6	BELLMOUTH INTAKE
2	6	DN1200 PN16 WEDGE GATE VALVE
3	6	LOW-LIFT PUMP (VERTICAL MOTOR MOUNT)
4	6	DN1000 PN16 NOZZLE CHECK VALVE
5	6	DN1000 PN16 CONTROL VALVE
6	6	DN1000 PN16 BUTTERFLY VALVE

REFERENCE DRAWINGS		REVISIONS			
DRG. No.	TITLE	REV No.	DATE	DESCRIPTION	APPR.
		A	28/01/11	FOR INFORMATION	PLR

DESIGNED:	D VAN COLLER	PROJECT ENGINEER:	P LE ROUX
DRAWN:	D VAN COLLER	TCTA:	
CHECKED:	J MULDER		
CHIEF DESIGNER:		SCALE:	1:250

SCALE 1 : 250 0 2,5 5 7,5 10 12,5

MOKOLO CROCODILE Consultants

TCTA A new word for water

MOKOLO CROCODILE WATER AUGMENTATION PROJECT (MCWAP)

VLIEEPOORT ABSTRACTION WORKS

LOW-LIFT PUMP STATION

LAYOUT AND MECHANICAL DETAILS

A3 | DWAF DRG. No. | DRAWING NUMBER 2B-C5-006 | REV No. A

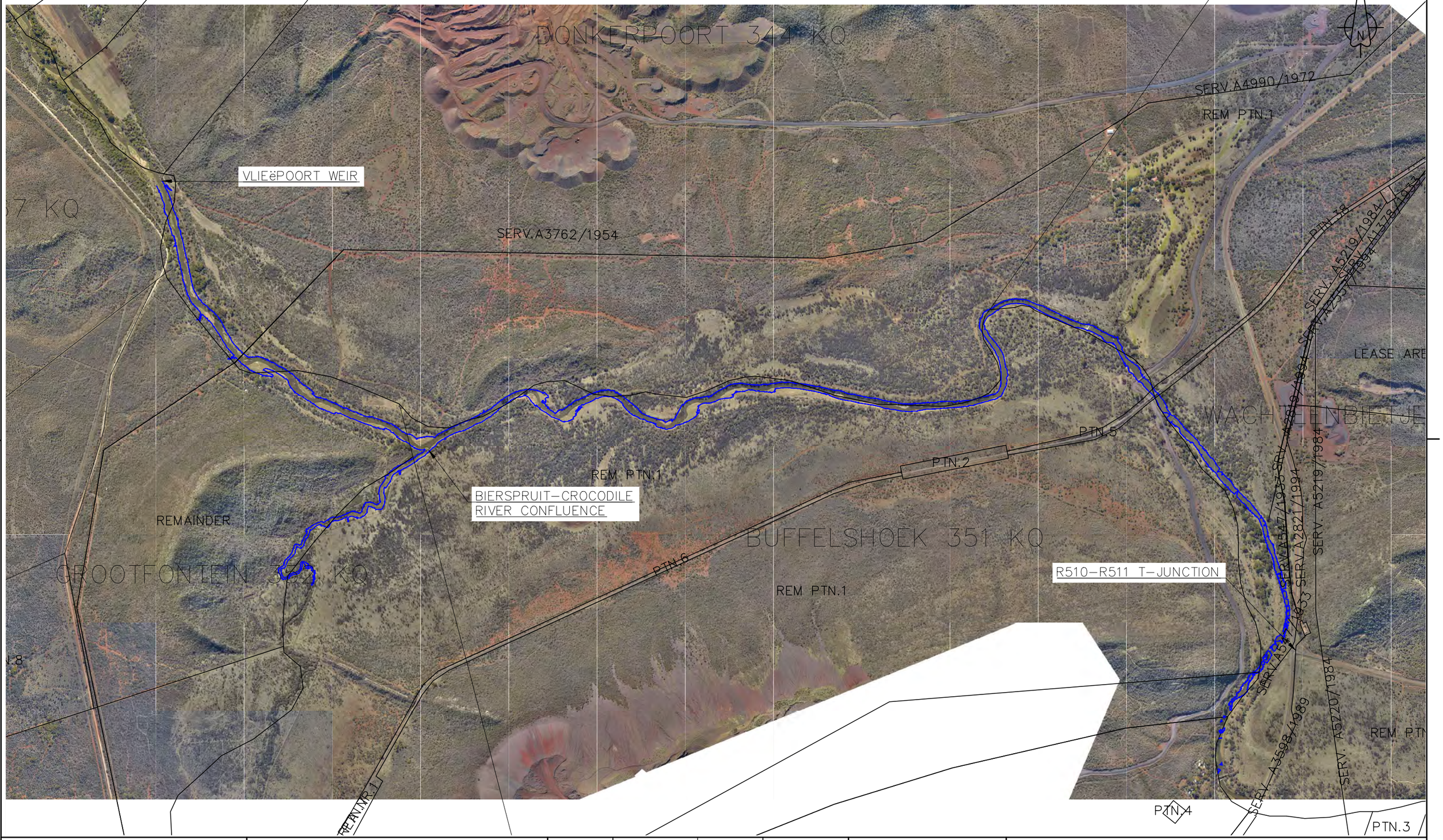

REFERENCE DRAWINGS		REVISIONS			
DRG. No.	TITLE	REV No.	DATE	DESCRIPTION	APPR.

DESIGNED:		PROJECT ENGINEER:	
DRAWN:		TCTA:	
CHECKED:			
CHIEF DESIGNER:		SCALE:	AS SHOWN

SCALE 1 : 20000

0 250 500 750 1000

MOKOLO CROCODILE Consultants

TCTA A new word for water

MOKOLO CROCODILE WATER AUGMENTATION PROJECT (MCWAP)

A3	DWAF DRG. No.	DRAWING NUMBER	REV No.

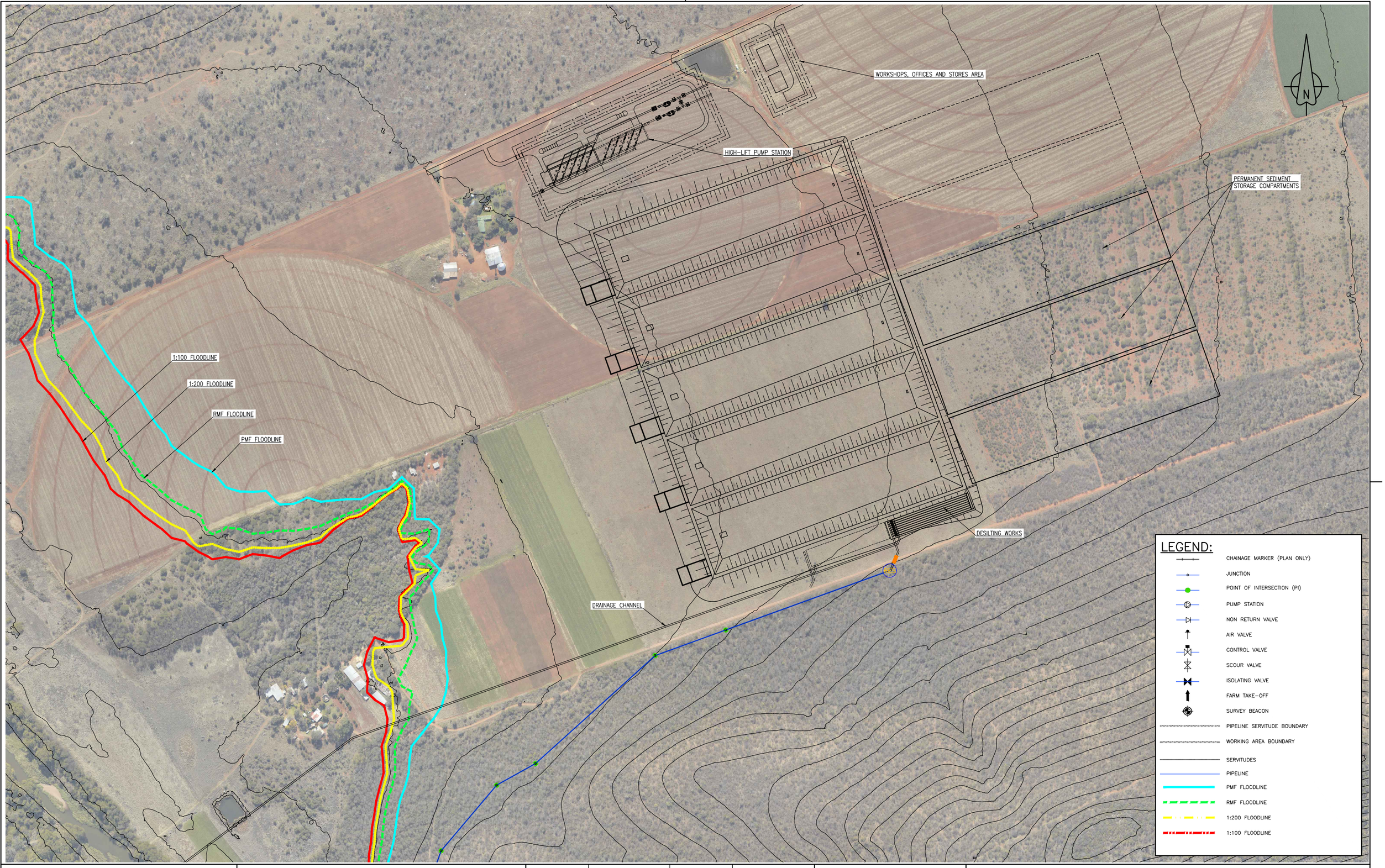

REFERENCE DRAWINGS	
DRG. No.	TITLE

REVISIONS			
REV No.	DATE	DESCRIPTION	APPR.
A	11/03/11	FOR INFORMATION	PLR
B	21/11/17	ADD WORKSHOP, OFFICES AND STORES FOOTPRINT	PLR

DESIGNED:	D VAN COLLER	PROJECT ENGINEER:	P LE ROUX
DRAWN:	D VAN COLLER	TCTA:	
CHECKED:	J MULDER		
CHIEF DESIGNER:	E SERFONTEIN	SCALE:	1:5000

SCALE: 1:5000 0 25 50 100 150 200 250

MOKOLO CROCODILE Consultants

TCTA A new word for water

MOKOLO CROCODILE WATER AUGMENTATION PROJECT (MCWAP)

VLIEEPOORT ABSTRACTION WORKS

BALANCING DAM AND HIGH-LIFT PUMP STATION

GENERAL LAYOUT

A3	DWAF DRG. No.	DRAWING NUMBER 2B – C3 – 002	REV No. B

BREAK PRESSURE RESERVOIR DETAILS

DESCRIPTION	VALUE
NON SPILL OVER CREST	1105.00 mASL
BASE LEVEL	1097.96 mASL
	1100.00 mASL
EMBANKMENT HEIGHT	6.34 m (MAXIMUM)
	1.62 m (MINIMUM)
SLOPES	SIDE SLOPES 1 : 2
	FLOOR 1 : 100
COMPARTMENT VOLUME	50 000 m^3
WATER LEVEL	1104.00 mASL
FREE BOARD	1 m
WATER DEPTH	6.04 m (MAXIMUM)
	5.00 m (MINIMUM)
SPILLWAY DEPTH	0.6 m
SPILLWAY WIDTH	12 m

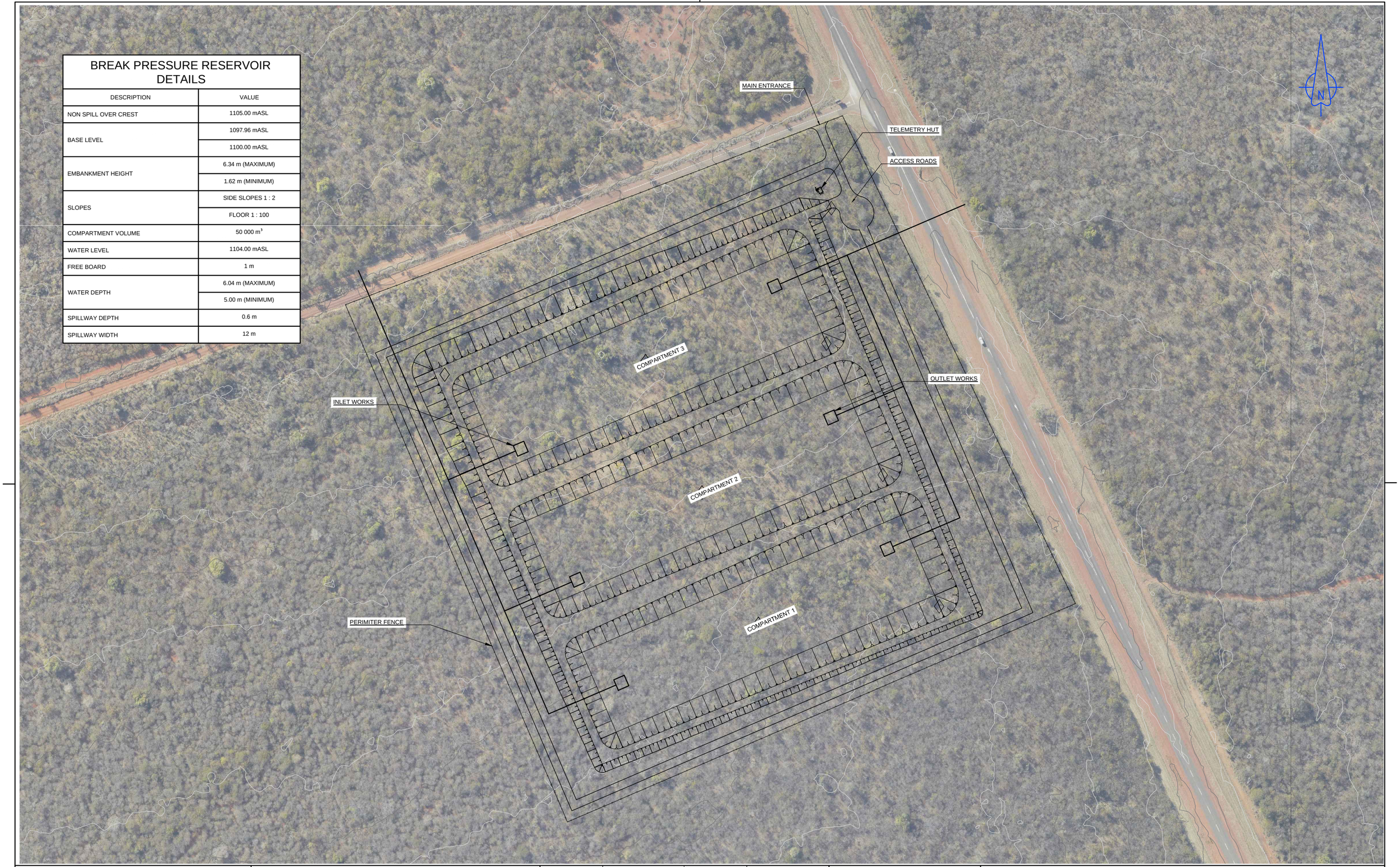

REFERENCE DRAWINGS		REVISIONS			
DRG. No.	TITLE	REV No.	DATE	DESCRIPTION	APPR.
		A	15/12/10	FOR INFORMATION	PLR

DESIGNED:	N JORDAAN	PROJECT ENGINEER:	P LE ROUX
DRAWN:	N JORDAAN	TCTA:	
CHECKED:	J MULDER		
CHIEF DESIGNER:	E SERFONTEIN	SCALE:	AS SHOWN

SCALE 1 : 2000 0 10 20 30 40 50 100

MOKOLO CROCODILE Consultants

TCTA A new word for water

MOKOLO CROCODILE WATER AUGMENTATION PROJECT (MCWAP)

BREAK PRESSURE RESERVOIR

GENERAL LAYOUT

A3 | DWAF DRG. No. | DRAWING NUMBER 2D - C3 - 001 | REV No. A

OPERATIONAL RESERVOIR DETAILS

DESCRIPTION	VALUE
NON SPILL OVER CREST	1019.00 mASL
BASE LEVEL	1011.00 mASL
	1012.55 mASL
EMBANKMENT HEIGHT	5.49 m (MAXIMUM)
	2.95 m (MINIMUM)
SLOPES	SIDE SLOPES 1 : 2
	FLOOR 1 : 100
COMPARTMENT VOLUME	50 000 m^3
WATER LEVEL	1018.00 mASL
FREE BOARD	1 m
WATER DEPTH	7 m (MAXIMUM)
	5.45 m (MINIMUM)
SPILLWAY DEPTH	0.6 m
SPILLWAY WIDTH	12 m

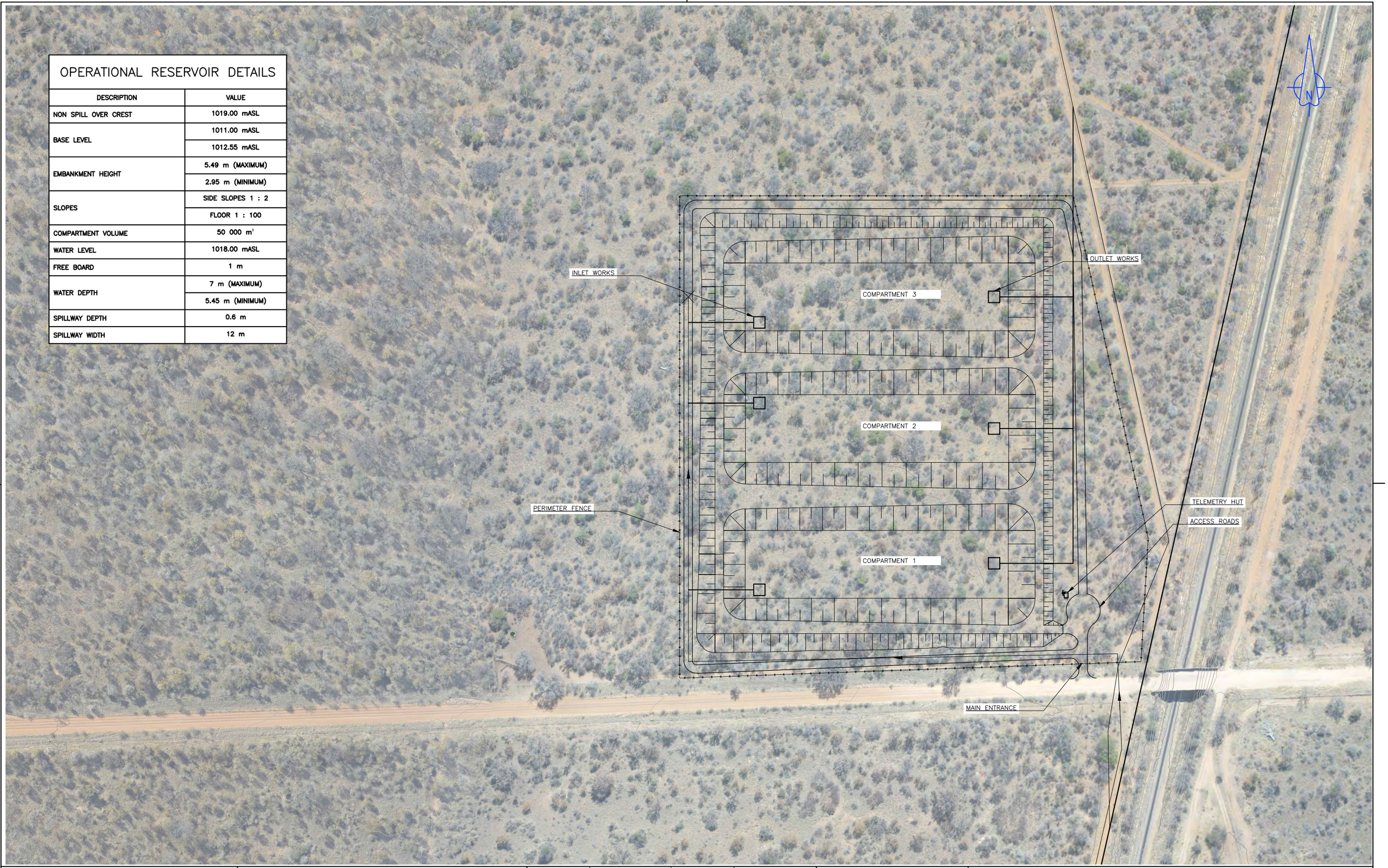

REFERENCE DRAWINGS		REVISIONS			
DRG. No.	TITLE	REV No.	DATE	DESCRIPTION	APPR.
		A	07/12/10	FOR INFORMATION	PLR

DESIGNED:	J MULDER	PROJECT ENGINEER:	P LE ROUX
DRAWN:	J MULDER	TCTA:	
CHECKED:	E SERFONTEIN		
CHIEF DESIGNER:	E SERFONTEIN	SCALE:	AS SHOWN

SCALE 1 : 2000 0 10 20 30 40 50 100

MOKOLO CROCODILE Consultants

TCTA A new word for water

MOKOLO CROCODILE WATER AUGMENTATION PROJECT (MCWAP)

OPERATIONAL RESERVOIR

GENERAL LAYOUT

A3 | DWAF DRG. No. | DRAWING NUMBER 2D – C3 – 010 | REV No. A

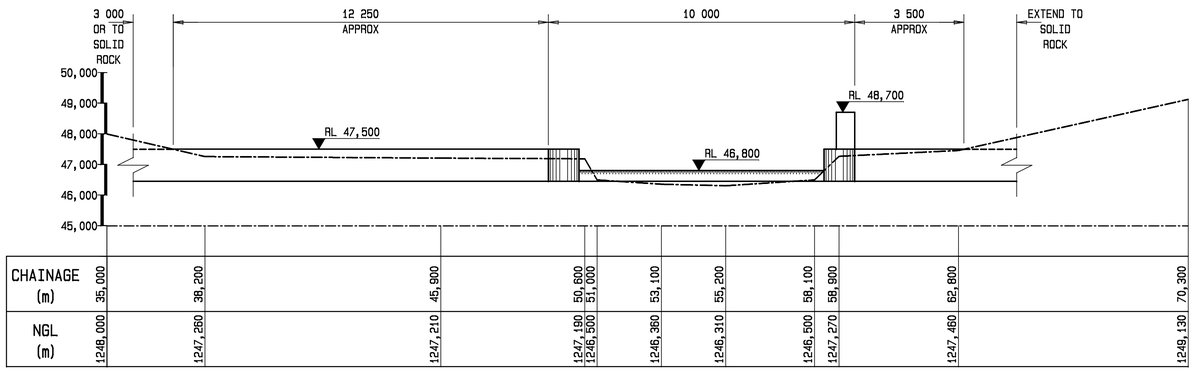

UPSTREAM ELEVATION

SCALE 1:100

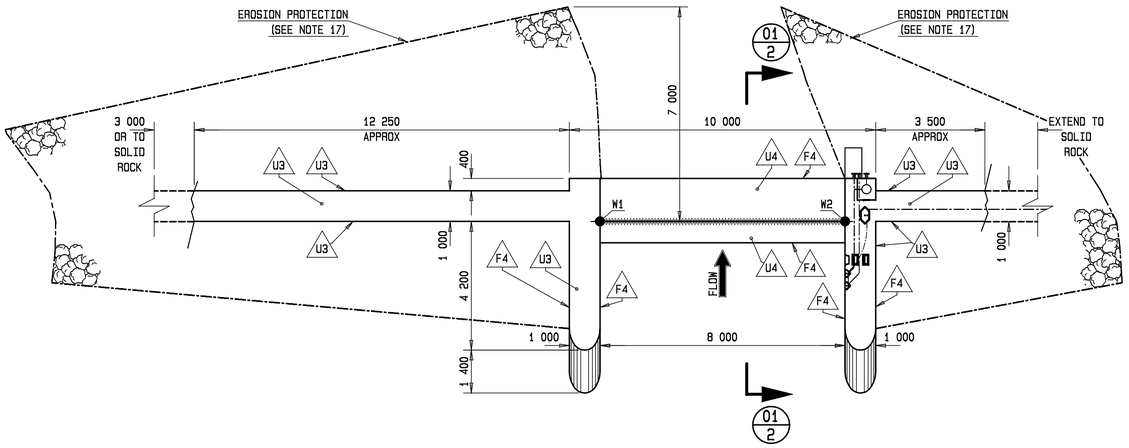

PLAN

SCALE 1:100

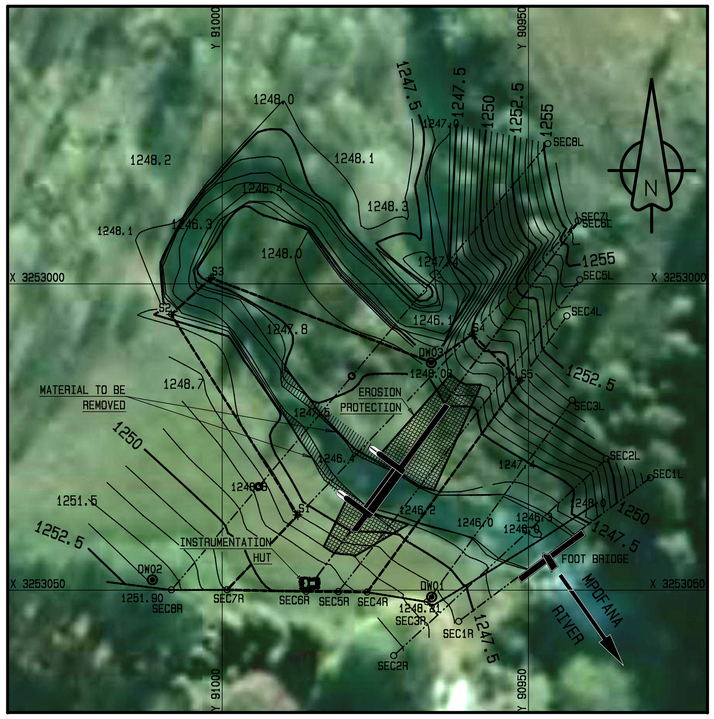

LOCALITY PLAN

SCALE 1:500

CONCRETE TOLERANCE

SURFACE IRREGULARITIES

CLASS OF FINISH		TOLERANCES IN mm A	TOLERANCES IN mm B
CAST AGAINST FORMWORK	F1	10	20
	F2	5	10
	F3	2	7
	F4	NIL	5
NOT CAST AGAINST FORMWORK	U1	10	20
	U2	NIL	10
	U3	NIL	7
	U4	NIL	5

A IS THE MAXIMUM ALLOWABLE ABRUPT IRREGULARITY
B IS THE MAXIMUM ALLOWABLE GRADUAL IRREGULARITY

SECTION

07 / 3 — SECTION NUMBER / SHEET NUMBER

CO-ORD SYSTEM: LO31 HARTEBEESHOEK
RL FROM DM55: 1 198,14 m ABOVE MSL

BM55	1198,18	88 270,92	3 256 088,95

STATION	RL	Y	X
DW1	1248,21	90 965,79	3 253 051,11
DW2	1251,90	91 011,39	3 253 048,30
DW3	1248,08	90 965,87	3 253 012,87

STRUCTURE	RL	Y	X
W1	1246,80	90 971,68	3 253 030,34
W2	1246,80	90 976,43	3 253 036,78

SERVITUDE	Y	X
SEC4R	90 976,33	3 253 050,30
SEC7R	90 999,18	3 253 049,92
S1	90 987,65	3 253 037,71
S2	91 008,31	3 253 004,97
S3	91 001,81	3 252 999,01
DW03	90 965,87	3 253 012,87
S4	90 959,18	3 253 008,22
S5	90 951,37	3 253 015,79

NOTES:

1. ANY DEVIATIONS FROM THE DESIGN DRAWINGS NEED TO BE APPROVED BY THE DESIGN ENGINEER PRIOR TO PLACING OF CONCRETE.
2. NEW CONCRETE GRADE 25/19 (UNLESS SPECIFIED OTHERWISE).
3. CAPACITY Q = 8,0 CUMECS, H = 0,635 m , SUBMERGENCE = 71%
4. MINIMUM CONCRETE COVER = 70 mm (UNLESS SPECIFIED OTHERWISE).
5. 15 x 15 mm CHAMFERS TO BE USED ON ALL EXPOSED CONCRETE CORNERS.
6. ALL CONCRETE FINISHES SHALL BE AS FOLLOWS EXCEPT WHERE OTHERWISE SPECIFIED:
   - 6.1 CLASSES F1 AND U1 TO SURFACES AGAINST WHICH BACKFILL OR FURTHER CONCRETE WILL BE PLACED
   - 6.2 CLASSES F4 AND U4 FOR ALL SURFACES OVER OR AGAINST WHICH WATER WILL FLOW
   - 6.3 UNFORMED SURFACE PREPERATION AND FINISH (ON WEIR CRESTS):
     - 6.3.1. FIRST WOOD FLOAT
     - 6.3.2. STEEL FLOAT WHILST PRESSING HARD (AFTER BLEEDING WATER HAS EVAPORATED UNTILL SMOOTH FINISH HAS BEEN ACHIEVED
     - 6.3.3. APPLY STEEL TROWEL SURFACE FINISH
     - 6.3.4. MOIST CURE FOR 10 DAYS WITHOUT USE OF ANY CURING AGENTS
     - 6.3.5. APPLY VERNI RADCON FORMULA #7 OR EQUIVALENT OVER ALL THE NOTCHES AND SIDEWALLS OVER OR AGAINST WHICH WATER WILL FLOW
   - 6.4 CLASSES F2 AND U2 TO SURFACES EXPOSED TO VIEW OVER OR AGAINST WHICH NO WATER FLOW WILL OCCUR (UNLESS SPECIFIED OTHERWISE)
   - 6.5 TOLERANCES FOR ALL FINISHES ARE INDICATED IN CONCRETE TOLERANCE TABLE
7. ALL VERTICAL DOWELS SHALL BE GROUTED WITH A SHRINKAGE COMPENSATED CEMENTITIOUS GROUT 0,4:1 W/C RATIO (BY MASS) OR BASF-SUPERFLOW BEDDING GROUT OR EQUIVALENT.
8. WET TO DRY EPOXY TO BE APPLIED ON ALL OLD EXISTING CONCRETE SURFACES BEFORE PLACEMENT OF NEW CONCRETE (ACCORDING TO MANUFACTURER'S SPECIFICATIONS). ALL SEALANTS USED AT CONSTRUCTION JOINTS TO BE APPLIED ACCORDING TO MANUFACTURER'S SPECIFICATIONS.
9. THE FOLLOWING TOPICS WILL BE DECIDED ON SITE IN CONSULTATION WITH THE DESIGN ENGINEERS:
   - 9.1. ROUTE OF ACCESS ROAD.
   - 9.2. EXTENT AND EXACT LAYOUT OF CUT-OFF WALLS.
   - 9.3. FINAL POSITION OF THE RECORDER HUT.
   - 9.4. EXTENT OF EROSION PROTECTION OF THE EMBANKMENTS.
10. CONDUIT PIPES (90 mm NOM. Ø HDPE 80 PN 6 PIPE) TO BE LAID WITH 6 mm SKI ROPE INSIDE FOR LATER INSTALLATION OF DATA CABLES. CONDUIT PIPES MAY ONLY BE JOINED USING A DRAW BOX. MAXIMUM DISTANCE ALLOWED BETWEEN DRAW BOXES IS 35m. DRAW BOXES SHOULD BE INSTALLED AT ANY 90° CHANGE IN CONDUIT PIPE DIRECTION.
11. INSTRUMENTATION (EG. GAUGE PLATES, SOLAR PANEL, LOGGER AND PRESSURE PROBES ETC.) SHOULD COMPLY WITH STANDARDS SET BY HYDROLOGICAL SERVICES. PRESSURE PROBES, LOGGERS AND SOLAR PANELS TO BE INSTALLED BY HYDROLOGY REGIONAL STAFF. ALL CONDUIT PIPE OPENINGS TO BE SEALED OFF AFTER INSTALLATION OF INSTRUMENTATION.
12. INSTRUMENTATION- AND DRAW BOXES, FLUSH STEPS AND SECURITY DOORS WITH ALL REQUIRED PARTS AND CONNECTIONS OBTAINABLE FROM INTERLOCK SYSTEMS (AS PER CONTRACT W 9257). CONTACT TEL NUMBER: (012) 664-2647.
13. PERMANENT BENCH MARKS TO BE INSTALLED ON LEFT AND RIGHT BANK CUT-OFF WALLS.
14. ROCK SURFACE, DIRECTLY RECEIVING CONCRETE, SHALL BE PROPERLY CLEANED AND PREPARED PRIOR TO CONCRETE CASTING. ALL ORGANIC MATERIAL AND LOOSE STONES MUST BE REMOVED. ALL FOUNDATIONS AND FOUNDATION PREPERATION NEED TO BE APPROVED BY THE DESIGN ENGINEER OR ON-SITE DESIGN REPRESENTATIVE BEFORE PLACEMENT OF CONCRETE.
15. DETAIL OF PROPOSED RIVER DIVERSION NEED TO BE SUBMITTED FOR EVALUATION AND APPROVAL TO THE DESIGN ENGINEER OR ON-SITE DESIGN REPRESENTATIVE BEFORE COMMENCEMENT OF DIVERSION WORKS.
16. TOLERANCE ON STAINLESS STEEL ANGLE ON CRUMP CREST TO BE +-0 mm TO 1 mm.
17. EXTENT OF EROSION PROTECTION TO BE FINALISED ON SITE IN CONSULTATION WITH DESIGN ENGINEER.
18. SEE ALSO ADDITIONAL NOTES ON OTHER SHEETS WHERE APPLICABLE.

SCALE 1:100 — 0 1 2 3 4 5 10 20 m

SCALE 1:500 — 0 5 10 20 30 40 50 100 m

SHEET	DESCRIPTION	OTHER No.	REG. No.
4/4	INSTRUMENTATION HUT	X	157 480/09
3/4	INSTRUMENTATION	X	157 479/09
2/4	SECTIONS AND DETAIL	X	157 478/09
1/4	PLAN, DETAIL AND LOCALITY	X	157 477/09

LIST OF DRAWINGS

REVISION				
MOD No.	DATE	DESCRIPTION		DWA

DEPARTMENT OF WATER AFFAIRS AND FORESTRY
REPUBLIC OF SOUTH AFRICA

HEAD OFFICE
CIVIL ENGINEERING
PRIVATE BAG X313
PRETORIA 0001

SEDIBENG BUILDING
185 SCHOEMAN STREET
PRETORIA
(012) 336-7500

P. YAKO
DIRECTOR GENERAL

DESIGN: P. WESSELS
CHECKED: DATE:
DRAWN: A.A. VAN DER WALT
ENGINEER: DATE:
EXTERNAL APPROVAL: DATE:
CHIEF ENGINEER / APP (Pr. Eng): DATE:
ACTING DIRECTOR (Pr. Eng): DATE:

HYDROLOGICAL SERVICES

MPOFANA RIVER GAUGING WEIR

(SPRING GROVE DAM)

PLAN, DETAIL AND LOCALITY

PROVINCE: - | DISTRICT: - | KEYCODES: HYD WGG - - - - | OTHER NUMBER -

LOCALITY No.: - | TENDER/ CONTRACT No. - | SHEET 1 OF 4 | REG. No. 157 477/09 | REV. -

CALCULATION FILE: -

SECTION
07 / 3
SECTION NUMBER
SHEET NUMBER

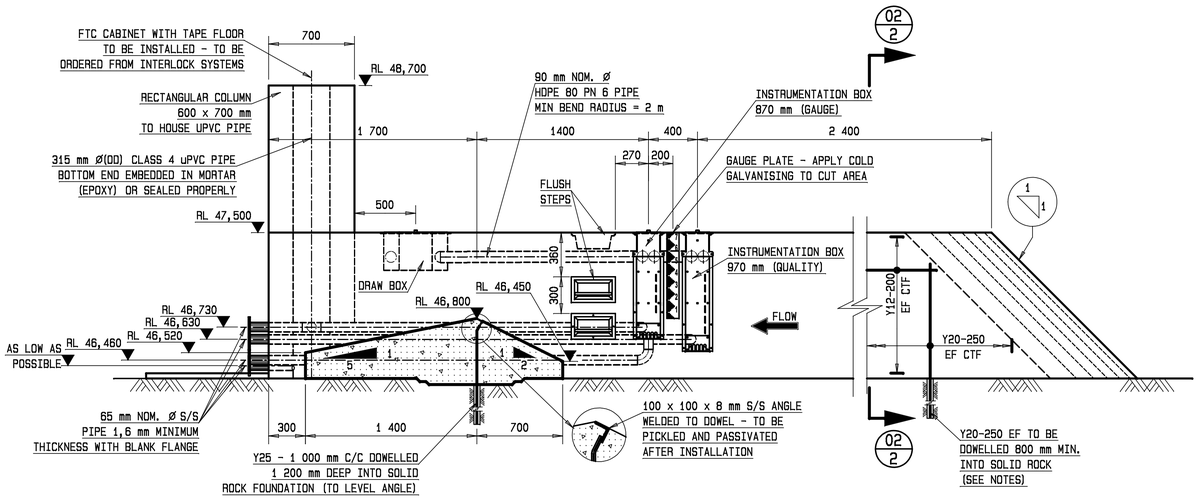

SECTION 01-01

SCALE 1:25

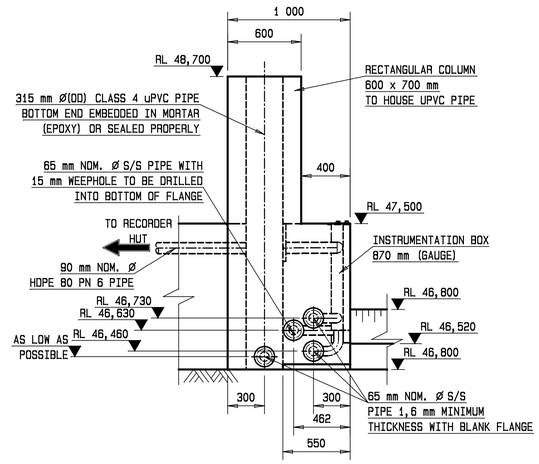

D/S ELEVATION (SECTION 01-01)

SCALE 1:25

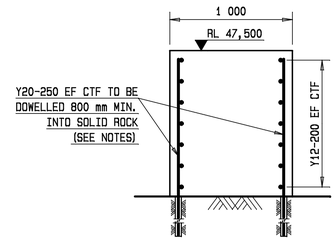

SECTION 02-02

SCALE 1:25

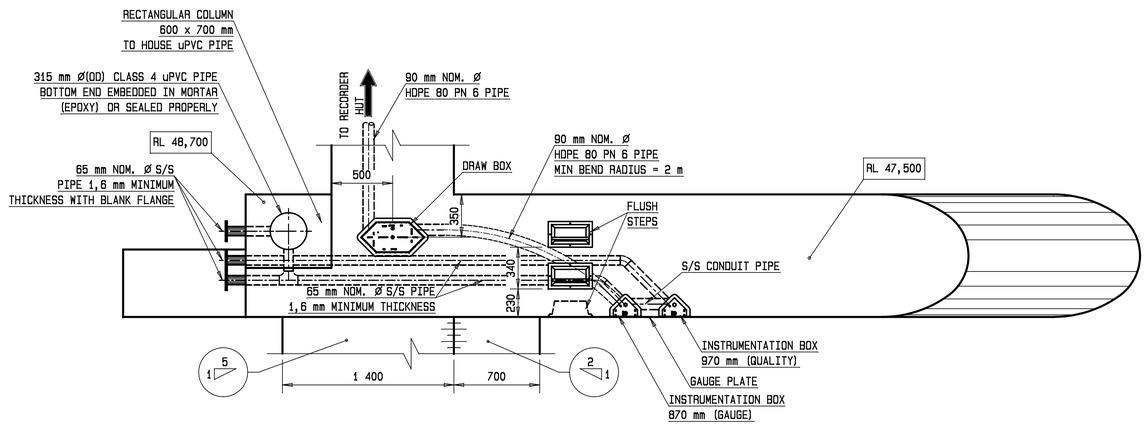

PLAN (SECTION 01-01)

SCALE 1:25

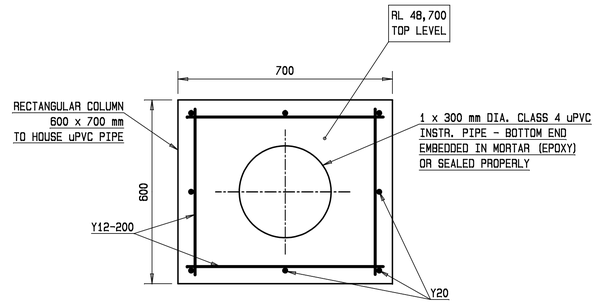

WET WELL REINFORCEMENT

SCALE 1:10

SCALE 1:10 — 0 0,1 0,2 0,3 0,4 0,5 1 2 m

SCALE 1:25 — 0 0,5 1 1,5 2 2,5 5 m

SHEET	DESCRIPTION	OTHER No.	REG. No.
4/4	INSTRUMENTATION HUT	X	157 480/09
3/4	INSTRUMENTATION	X	157 479/09
2/4	SECTIONS AND DETAIL	X	157 478/09
1/4	PLAN, DETAIL AND LOCALITY	X	157 477/09

LIST OF DRAWINGS

REVISION				
MOD No.	DATE	DESCRIPTION		DWA

DEPARTMENT OF WATER AFFAIRS AND FORESTRY
REPUBLIC OF SOUTH AFRICA

HEAD OFFICE
CIVIL ENGINEERING
PRIVATE BAG X313
PRETORIA 0001

SEDIBENG BUILDING
185 SCHOEMAN STREET
PRETORIA
(012) 336-7500

P. YAKO
DIRECTOR GENERAL

DESIGN: P. WESSELS
CHECKED: DATE:
DRAWN: A.A. VAN DER WALT
ENGINEER: DATE:
EXTERNAL APPROVAL: DATE:
CHIEF ENGINEER / APP (Pr. Eng): DATE:
ACTING DIRECTOR (Pr. Eng): DATE:

HYDROLOGICAL SERVICES

MPOFANA RIVER GAUGING WEIR

(SPRING GROVE DAM)
SECTIONS AND DETAIL

PROVINCE: -
DISTRICT: -
LOCALITY No.: -
TENDER/ CONTRACT No. -
CALCULATION FILE: -

KEYCODES: HYD WGG - - - OTHER NUMBER -

SHEET 2 OF 4
REG. No. 157 478/09
REV. -

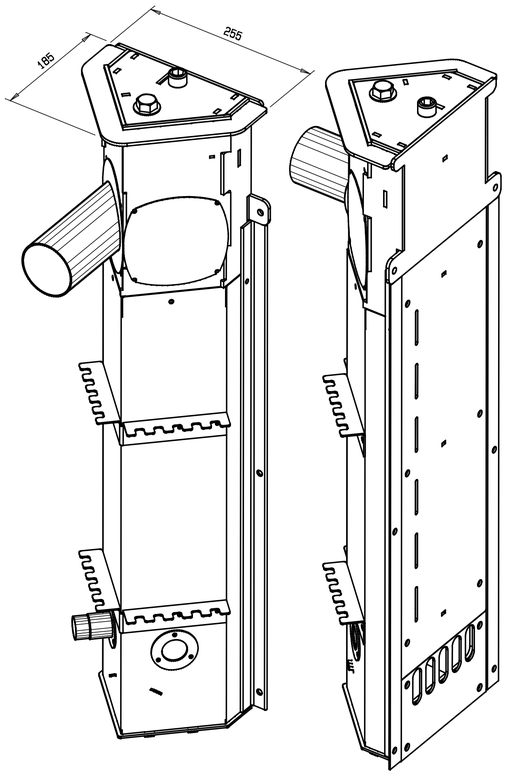

INSTRUMENTATION BOX

NTS

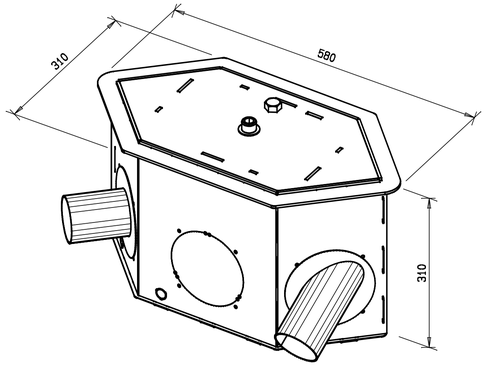

DRAW BOX

NTS

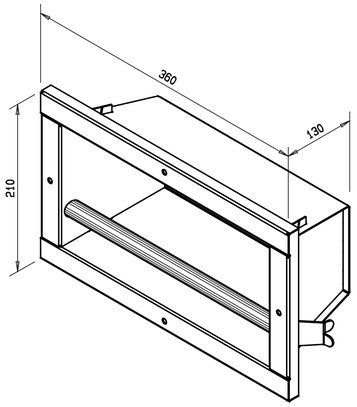

FLUSH STEP

NTS

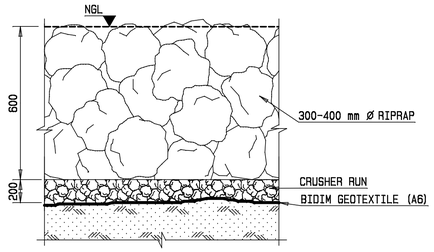

EROSION PROTECTION DETAIL

NTS

NOTES:

1. BOXES AND FLUSH STEPS (S/S 304 L) OBTAINABLE FROM "HLOBISILE ENGINEERING MANDATE PTY. LTD." (TEL: 012 460 8485) OR EQUIVALENT. DETAIL DRAWINGS AVAILABLE ON REQUEST.

ENTRY OPTIONS

STANDARD ENTRY OPTIONS ROTATING AXIS

TOP HAT ENTRY OPTIONS PERPENDICULAR AXIS

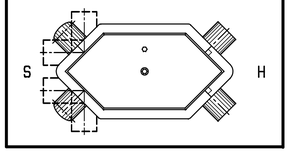

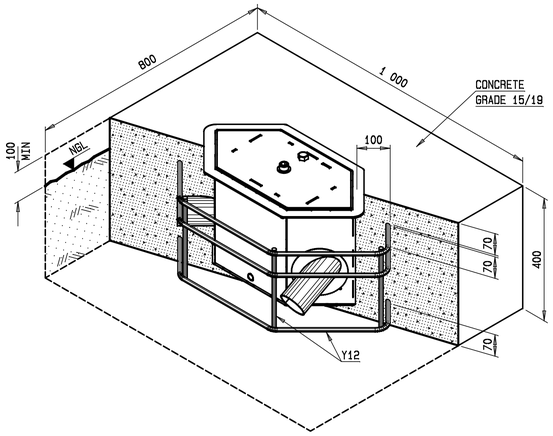

INSTALLATION OF DRAW BOX

(ON EMBANKMENTS)
NTS

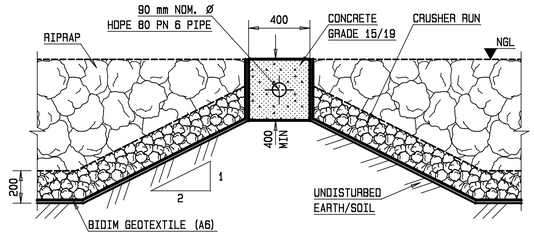

CONDUIT PIPE PROTECTION

(ON RIPRAP PROTECTED EMBANKMENTS)
NTS

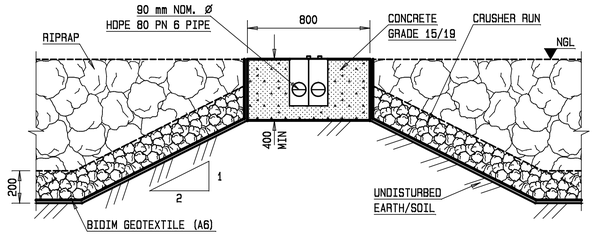

INSTALLATION OF DRAW BOX

(ON RIPRAP PROTECTED EMBANKMENTS)
NTS

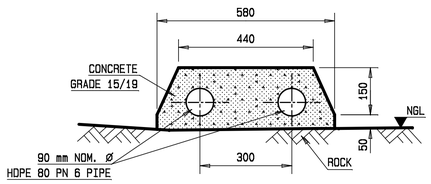

CONDUIT PIPE PROTECTION

(ON TOP OF ROCK)
NTS

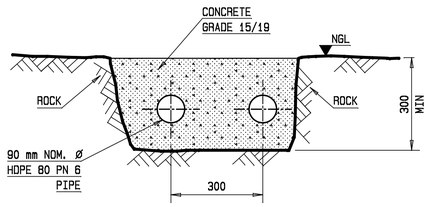

CONDUIT PIPE PROTECTION

(IN ROCK)
NTS

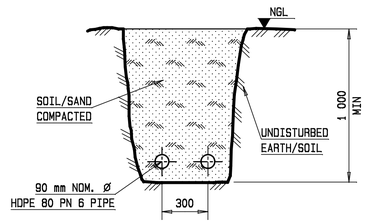

CONDUIT PIPE PROTECTION

(IN SOIL)
NTS

INSTALLATION DETAILS OF DRAW BOXES	
SENSOR / ITEM	
INSTALLATION	2x S-TYPE ENTRIES
LENGTH (mm)	"STANDARD"
CONDUIT PIPE Ø	HDPE 80 PN 6 PIPE NOM. Ø 90 mm/ID 81 mm
MATERIAL CLASSIFICATION	STAINLESS STEEL 304 L
NUMBER OF UNITS	1

INSTALLATION DETAILS OF FTC CABINETS	
SENSOR / ITEM	THALIMEDES / DIPTAPE
INSTALLATION	WET WELL
LENGTH (mm)	"STANDARD"
CONDUIT PIPE Ø	HDPE 80 PN 6 PIPE NOM. Ø 90 mm/ID 81 mm
MATERIAL CLASSIFICATION	STAINLESS STEEL 304 L
NUMBER OF UNITS	1

INSTALLATION DETAILS OF INSTRUMENTATION BOX	
SENSOR / ITEM	UPSTREAM L/B PRESSURE TRANSDUCER
INSTALLATION	WEIR/FLUME
LENGTH (mm)	870
CONDUIT PIPE Ø	HDPE 80 PN 6 PIPE NOM. Ø 90 mm/ID 81 mm
MATERIAL CLASSIFICATION	STAINLESS STEEL 304 L
NUMBER OF UNITS	1

INSTALLATION DETAILS OF INSTRUMENTATION BOX	
SENSOR / ITEM	WATER QUALITY PRESSURE TRANSDUCER
INSTALLATION	WEIR/FLUME
LENGTH (mm)	970
CONDUIT PIPE Ø	HDPE 80 PN 6 PIPE NOM. Ø 90 mm/ID 81 mm
MATERIAL CLASSIFICATION	STAINLESS STEEL 304 L
NUMBER OF UNITS	1

INSTALLATION DETAILS OF FLUSH STEPS	
SENSOR / ITEM	
INSTALLATION	WEIR/FLUME
LENGTH (mm)	"STANDARD"
CONDUIT PIPE Ø	N/A
MATERIAL CLASSIFICATION	STAINLESS STEEL 304 L
NUMBER OF UNITS	4

SHEET	DESCRIPTION	OTHER No.	REG. No.
4/4	INSTRUMENTATION HUT	X	157 480/09
3/4	INSTRUMENTATION	X	157 479/09
2/4	SECTIONS AND DETAIL	X	157 478/09
1/4	PLAN, DETAIL AND LOCALITY	X	157 477/09

LIST OF DRAWINGS

REVISION				
MOD No.	DATE	DESCRIPTION		DWA

DEPARTMENT OF WATER AFFAIRS AND FORESTRY
REPUBLIC OF SOUTH AFRICA

HEAD OFFICE
CIVIL ENGINEERING
PRIVATE BAG X313
PRETORIA 0001

SEDIBENG BUILDING
185 SCHOEMAN STREET
PRETORIA
(012) 336-7500

P. YAKO
DIRECTOR GENERAL

DESIGN: P. WESSELS
CHECKED: DATE: DRAWN: A.A. VAN DER WALT
ENGINEER: DATE: EXTERNAL APPROVAL: DATE:
CHIEF ENGINEER / APP (Pr. Eng): DATE: ACTING DIRECTOR (Pr. Eng): DATE:

HYDROLOGICAL SERVICES

MPOFANA RIVER GAUGING WEIR

(SPRING GROVE DAM)
INSTRUMENTATION

PROVINCE: - DISTRICT: - KEYCODES: HYD WGG - - - OTHER NUMBER -
LOCALITY No.: - TENDER/ CONTRACT No. -
CALCULATION FILE: -
SHEET 3 OF 4 REG. No. 157 479/09 REV. -

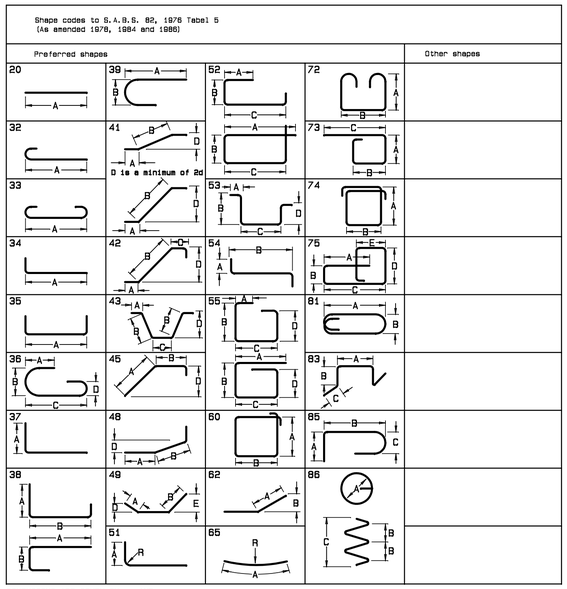

DIMENSIONS ARE GIVEN IN mm AND m.
DIMENSIONS OF BARS ARE OVERALL OUTSIDE DIMENSIONS.

UNDER CERTAIN CIRCUMSTANCES WHERE HIGH YIELD STRESSES MIGHT BE INDUCED, THE STANDARD RADIUS (i.e. 2d FOR MILD STEEL AND 3d FOR HIGH YIELD STEEL) MAY BE INCREASED TO 7,5d BUT THIS SHALL NOT APPLY TO END ANCHORAGES DENOTED BY h OR n. THIS CHANGE SHOULD BE INDICATED BY ADDING THE LETTER S AFTER THE SHAPE CODE NUMBER.

FOR WELDED MESH FABRIC, DIMENSIONS A & B DEFINE THE NET OVERALL AREA OF MESH. NO ALLOWANCE HAS BEEN MADE FOR LAPS.

Member Location	No. of	Type, Ø & mark	No. in each	Total no.	Cut length mm	Shape code	Bending Dimensions (mm) A	B	C	D	E/R	Mass kg
RECORDER HUT	1	Y12-F01	20	20	2 200	20	2 200					39
	1	Y10-F02	24	24	1 725	20	1 725					26
	1	Y12-F03	43	43	1 100	37	750					42
	1	Y12-F04	43	43	2 500	37	2 320					96
	1	Y10-F05	18	18	1 750	37	1 400					20
	1	Y10-F06	18	18	1 650	37	1 300					19
	1	Y10-F07	20	20	1 125	20	1 125					14
	1	Y10-F08	24	24	1 325	20	1 325					20
	1	Y10-F09	8	8	2 250	35	2 100					11
	1	Y10-F10	8	8	2 100	20	2 100					11
	1	Y10-F11	4	4	1 250	53	200	350	100	350		3
	1	Y10-F12	18	18	500	38	200	100				6
							TOTALS			Y10		130
										Y12		177

Dimensions are given in mm and m
Dimensions of bars are overall

REINFORCEMENT

(To: SABS 920-1969 with amendments)
R - Plain mild steel bars (Type A)
(fy=250 MPa ≤ 20 mm Ø and fy=230 MPa ≥ 25 mm Ø)
Z - Deformed mild steel
(fy=250 MPa ≤ 20 mm Ø and fy=230 MPa ≥ 25 mm Ø)
Y - High yield steel
(Type C : Class 2 : Grade 1 : fy=450 MPa)
Where: fy=Yield stress

EXAMPLE

20Y25-A63-150 T2

20 - Bars
Y - High yield steel
25 - Diameter in mm
A63 - Bar mark number
150 - Spacing c/c in mm
T2 - Location

NF - Near face IF - Inside face
FF - Far face OF - Outside face
EF - Each face T - Top
EW - Each way B - Bottom
CTF - Cut to fit CTL - Cut to length
ABR - Alternative bars reversed

Cover as specified

NOTES:

1. CONCRETE GRADE 25/19 (UNLESS SPECIFIED OTHERWISE).
2. CONCRETE COVER TO REINFORCEMENT = 40 mm COVER

SECTION

07 / 3 — SECTION NUMBER / SHEET NUMBER

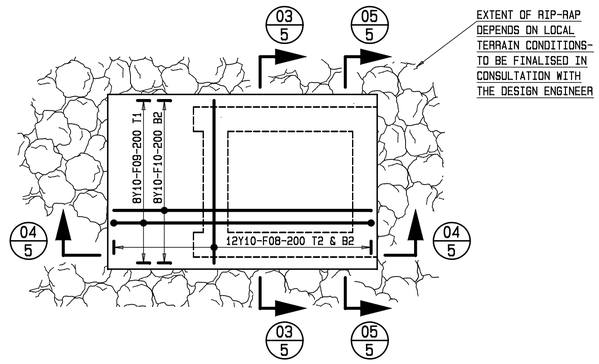

REINFORCEMENT DETAIL OF ROOF

SCALE 1:25

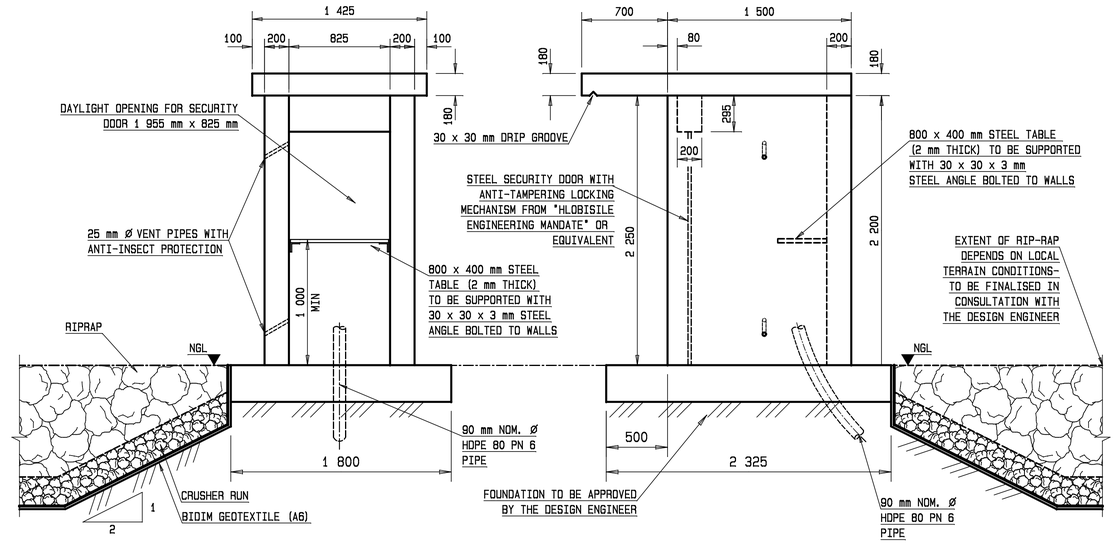

REINFORCED CONCRETE RECORDER HUT

SCALE 1:25

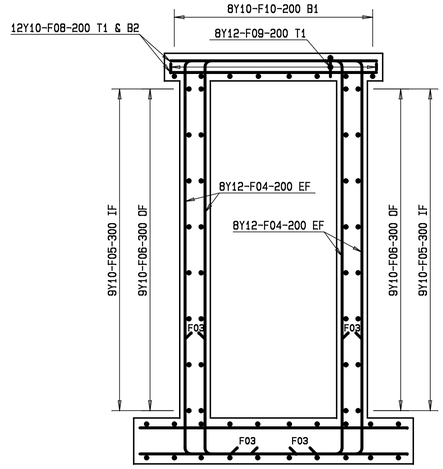

SECTION 03-03

SCALE 1:20

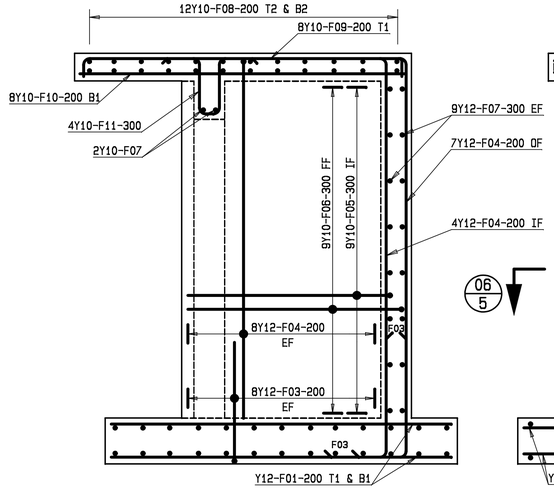

SECTION 04-04

SCALE 1:20

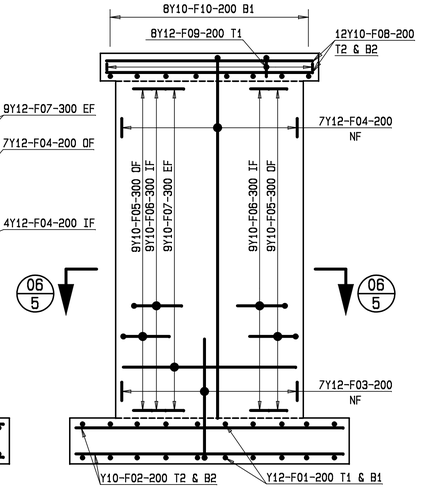

SECTION 05-05

SCALE 1:20

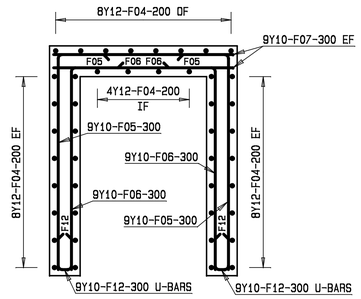

SECTION 06-06

SCALE 1:20

SHEET	DESCRIPTION	OTHER No.	REG. No.
4/4	INSTRUMENTATION HUT	X	157 480/09
3/4	INSTRUMENTATION	X	157 479/09
2/4	SECTIONS AND DETAIL	X	157 478/09
1/4	PLAN, DETAIL AND LOCALITY	X	157 477/09

LIST OF DRAWINGS

SCALE 1:20 — 0 0,5 1 1,5 2 4 m

SCALE 1:25 — 0 0,5 1 1,5 2 2,5 5 m

REVISION				
MOD No.	DATE	DESCRIPTION		DWA

DEPARTMENT OF WATER AFFAIRS AND FORESTRY
REPUBLIC OF SOUTH AFRICA
HEAD OFFICE
CIVIL ENGINEERING
PRIVATE BAG X313
PRETORIA 0001
SEDIBENG BUILDING
185 SCHOEMAN STREET
PRETORIA
(012) 336-7500
P. YAKO
DIRECTOR GENERAL

DESIGN: P. WESSELS
CHECKED: DATE: DRAWN: A.A. VAN DER WALT
ENGINEER: DATE: EXTERNAL APPROVAL: DATE:
CHIEF ENGINEER / APP (Pr. Eng): DATE: ACTING DIRECTOR (Pr. Eng): DATE:

HYDROLOGICAL SERVICES

MPOFANA RIVER GAUGING WEIR

(SPRING GROVE DAM)
INSTRUMENTATION HUT

PROVINCE: - DISTRICT: - KEYCODES: HYD WGG - - - OTHER NUMBER -
LOCALITY No.: - TENDER/ CONTRACT No. -
CALCULATION FILE: -
SHEET 4 OF 4 REG. No. 157 480/09 REV. -